KS2 Hydraulic Cylinders

2nd edition

MacArtney
UNDERWATER TECHNOLOGY

Copyright© MacArtney
All rights reserved. Printed in 2018.

Specifications are subject to change without prior notice.

Introduction
KS2 Hydraulic Cylinders
Page 5

KS2-DVL Cylinders
Spherical bearing - both ends
Page 6

KS2-DVLG Cylinders
Spherical bearing - threaded rod end
Page 7

KS2-DVLF Cylinders
Front flange - spherical bearing rod end
Page 8

KS2-DVGF Cylinders
Front flange - threaded rod end
Page 9

KS2-DVLP Cylinders
Trunnion mounting - spherical bearing rod end
Page 10

KS2-DVGP Cylinders
Trunnion mounting - threaded rod end
Page 11

KS2-DVLBF Cylinders
Bottom flange - spherical bearing rod end
Page 12

KS2-DVGBF Cylinders
Bottom flange - threaded rod end
Page 13

The MacArtney Underwater Technology Group is dedicated to maintaining a strong global presence. With 18 group operations supplemented by 26 representative companies spread across the world, MacArtney solutions are always available locally - with full global support.

KS2 Hydraulic Cylinders

The KS2 series is well suited for heavy industry and demanding, tough, operational conditions. The cylinder works with a pressure of up to 250 bar and has been designed in accordance with the DNV set of rules.

Dimension range Ø ID:	Tube diameter from Ø50 to Ø250 mm
Design pressure:	Max pressure 250 bar
Rod speed:	Max 0.5 m/sec (stroke end velocity max 0.1 m/sec)
Operating temperature:	-20ºC to +80ºC
Pressure media:	Mineral based hydraulic oil
Surface treatment:	Black primer (standard)
Rod material:	20MnV6 with min. 20µ hard chrome Alternatively: W 1.4418 or 1.4542 min. 20µ hard chrome
Cylinder tube:	Roller polished (E355 + SR) EN-10305-1
Seals:	High quality seals according to ISO standards
Dampening:	The KS2 series is available in a special version with single or double zones on request
Positioning:	The KS2 series is available in a special version with different options of positioners, transducers, and inductive proximity sensors
Types:	Temposonics®, Balluff®, Rota®, and alike

The KS2 series can be custom designed to different seal types, temperature, speed, and pressure media.

This series is available with the following standard mounting types:

- Spherical bearing – both ends (DVL)
- Spherical bearing – threaded rod end (DVLG)
- Front flange – spherical bearing rod end (DVLF)
- Front flange – threaded rod end (DVGF)
- Trunnion mounting – spherical bearing rod end (DVLP)
- Trunnion mounting – threaded rod end (DVGP)
- Bottom flange – spherical bearing rod end (DVLBF)
- Bottom flange – threaded rod end (DVGBF)

KS2-DVL Cylinders
Spherical bearing - both ends

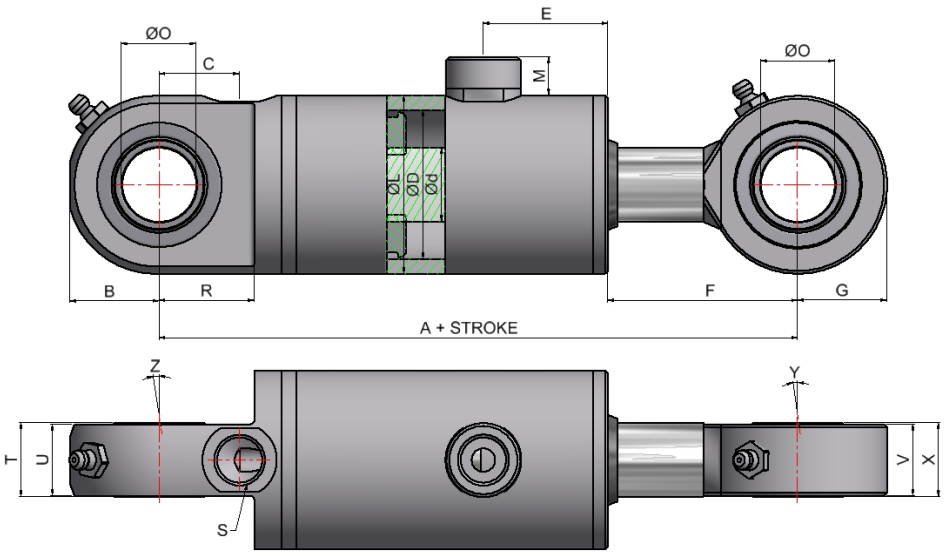

Specifications

ØD	50	63	80	90	100	110	125	140	160	180	200	220	250
Ød	25/32	32/40	40/50	45/56	50/63	56/70	63/80	70/90	80/100	90/110	100/125	100/140	110/160
A	190	215	240	270	305	320	355	375	420	440	470	620	675
B	30	35	40	50	53	53	65	73	80	83	88	120	130
C	27	33	36	44	54	54	65	76	77	84	96	169	195
E	42	46	51	56	76	76	90	102	114	122	122	135	158
F	64	74	80	101	99	114	109	102	127	120	137	165	166
G	30	35	40	50	55	55	65	80	85	85	90	120	130
ØL	60	73	95	105	120	130	145	165	185	210	230	250	298.5
M	14	14	19	19	19	19	19	19	22	22	22	22	22
ØO	25 (-0.01)	30 (-0.01)	35 (-0.012)	45 (-0.012)	50 (-0.012)	50 (-0.012)	60 (-0.015)	70 (-0.015)	80 (-0.015)	80 (-0.015)	90 (-0.02)	110 (-0.02)	120 (-0.02)
R	32	40	45	50	63	63	71	80	90	90	100	140	160
S	3/8"	3/8"	1/2"	1/2"	3/4"	3/4"	3/4"	3/4"	1"	1"	1"	1"	1"
T	29	30	35	40	43	43	54	65	74	74	60	70	85
U	24	28	32	38	40	40	50	60	70	70	80	80	90
V	24	28	32	38	40	40	50	60	70	70	80	80	90
X	29	30	35	40	43	43	54	65	74	74	60	70	85
Y	4°	4°	4°	4°	4°	4°	4°	4°	4°	4°	4°	4°	6°
Z	4°	4°	4°	4°	4°	4°	4°	4°	4°	4°	4°	4°	6°

All measurements in millimetres (mm) unless otherwise quoted.

KS2-DVLG Cylinders

Spherical bearing - threaded rod end

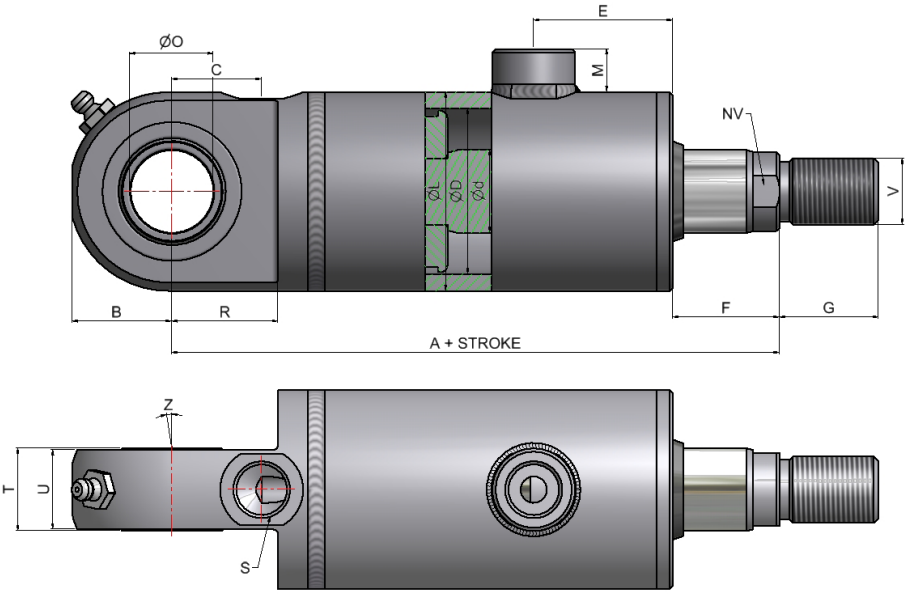

Specifications

ØD	50	63	80	90	100	110	125	140	160	180	200	220	250
Ød	25/32	32/40	40/50	45/56	50/63	56/70	63/80	70/90	80/100	90/110	100/125	100/140	110/160
A	160	180	200	220	252	265	290	302	340	357	380	508	548
B	30	35	40	50	53	53	65	73	80	83	88	120	130
C	25	33	36	44	54	54	65	76	77	84	96	169	195
E	42	46	51	56	76	76	90	102	114	122	122	135	158
F	34	39	40	51	46	59	44	29	47	37	47	53	39
G	28	36	45	45	56	56	63	75	85	85	85	106	112
ØL	60	73	95	105	120	130	145	165	185	210	230	250	298.5
M	14	14	19	19	19	19	19	19	22	22	22	22	22
ØO	25 (-0.01)	30 (-0.01)	35 (-0.012)	45 (-0.012)	50 (-0.012)	50 (-0.012)	60 (-0.015)	70 (-0.015)	80 (-0.015)	80 (-0.015)	90 (-0.02)	110 (-0.02)	120 (-0.02)
NV	22/25	25/35	35/45	38/48	45/55	48/60	55/70	60/80	70/90	80/102	90/115	92/130	102/150
R	32	40	45	50	63	63	71	80	90	90	100	140	160
S	3/8”	3/8”	1/2”	1/2”	3/4”	3/4”	3/4”	3/4”	1”	1”	1”	1”	1”
T	29	30	35	40	43	43	54	65	74	74	60	70	85
U	24	28	32	38	40	40	50	60	70	70	80	80	90
V	M20x1.5	M27x2	M33x2	M33x2	M42x2	M42x2	M48x2	M56x2	M64x3	M64x3	M72x3	M90x3	M100x3
Z	4°	4°	4°	4°	4°	4°	4°	4°	4°	4°	4°	4°	6°

All measurements in millimetres (mm) unless otherwise quoted.

KS2-DVLF Cylinders

Front flange - spherical bearing rod end

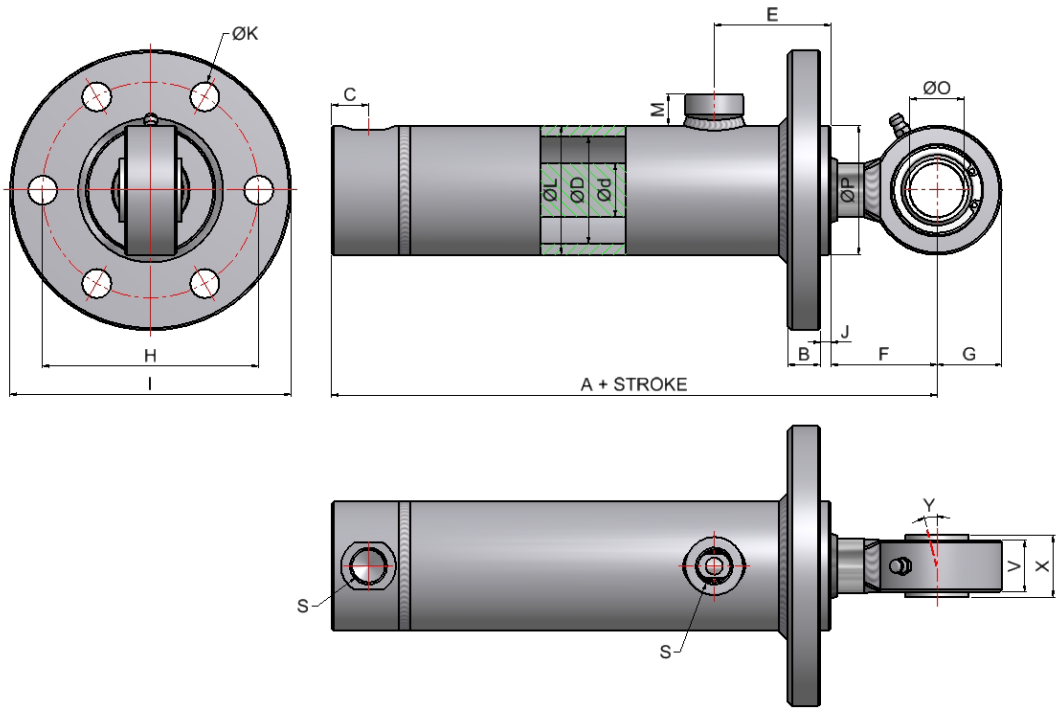

Specifications

ØD	50	63	80	90	100	110	125	140	160	180	200	220	250
Ød	25/32	32/40	40/50	45/56	50/63	56/70	63/80	70/90	80/100	90/110	100/125	100/140	110/160
A	179	195	217	245	269	287	306	311	366	375	396	480	515
B	15	15	20	25	25	30	30	30	40	40	45	50	55
C	15	18	18	20	22	23	25	21	28	26	27	40	35
E	54	54	62	67	77	82	85	103	114	122	122	135	158
F	49	62	68	89	99	102	109	102	127	120	137	165	166
G	30	35	40	50	55	55	65	80	85	85	90	120	130
H	100	115	155	165	190	200	215	235	275	300	330	375	420
I	130	145	195	205	230	240	255	275	330	355	390	440	505
J	5	5	5	5	12	12	10	15	20	20	20	20	25
ØK	6 x 13.5	6 x 13.5	6 x 17.5	6 x 17.5	6 x 22	6 x 22	8 x 22	8 x 22	8 x 26	8 x 26	8 x 33	8 x 33	8 x 39
ØL	60	73	95	105	120	130	145	165	185	210	230	254	298.5
M	14	14	18	18	18	18	18	18	22	22	22	22	22
ØO	25 (-0.01)	30 (-0.01)	35 (-0.012)	45 (-0.012)	50 (-0.012)	50 (-0.012)	60 (-0.015)	70 (-0.015)	80 (-0.015)	80 (-0.015)	90 (-0.02)	110 (-0.02)	120 (-0.02)
ØP	60	73	90	100	115	125	145	165	185	210	230	250	298
S	3/8”	3/8”	1/2”	1/2”	3/4”	3/4”	3/4”	3/4”	1”	1”	1”	1”	1”
V	24	28	32	38	40	40	50	60	70	70	80	80	90
X	29	30	35	40	43	43	54	65	74	74	60	70	85
Y	4°	4°	4°	4°	4°	4°	3°	4°	4°	4°	6°	8°	6°

All measurements in millimetres (mm) unless otherwise quoted.

KS2-DVGF Cylinders

Front flange - threaded rod end

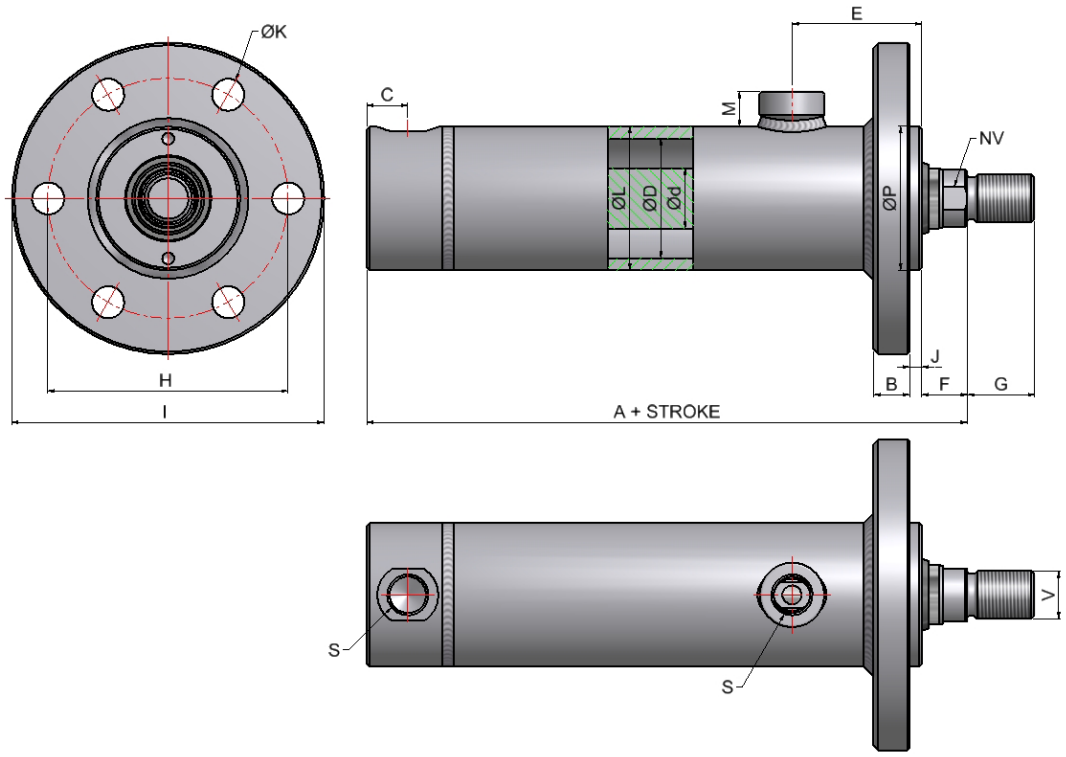

Specifications

ØD	50	63	80	90	100	110	125	140	160	180	200	220	250
Ød	25/32	32/40	40/50	45/56	50/63	56/70	63/80	70/90	80/100	90/110	100/125	100/140	110/160
A	149	160	177	195	216	232	241	238	286	292	306	368	388
B	15	15	20	25	25	30	30	30	40	40	45	50	55
C	15	18	18	20	22	23	25	21	28	26	27	40	35
E	54	54	62	67	77	82	85	103	114	122	122	135	158
F	19	27	28	39	46	47	44	29	47	37	47	53	39
G	28	36	45	45	56	56	63	75	85	85	85	106	112
H	100	115	155	165	190	200	215	235	275	300	330	375	420
I	130	145	195	205	230	240	255	275	330	355	390	440	505
J	5	5	5	5	12	12	10	15	20	20	20	20	25
ØK	6 x 13.5	6 x 13.5	6 x 17.5	6 x 17.5	6 x 22	6 x 22	8 x 22	8 x 22	8 x 26	8 x 26	8 x 33	8 x 33	8 x 39
ØL	60	73	95	105	120	130	145	165	185	210	230	254	298.5
M	14	14	18	18	18	18	18	18	22	22	22	22	22
ØP	60	73	90	100	115	125	145	165	185	210	230	250	298
S	3/8”	3/8”	1/2”	1/2”	3/4”	3/4”	3/4”	3/4”	1”	1”	1”	1”	1”
V	M20x1.5	M27x2	M33x2	M33x2	M42x2	M42x2	M48x2	M56x2	M64x3	M64x3	M72x3	M90x3	M100x3
NV	22/25	25/35	35/45	38/48	45/55	48/60	55/70	60/80	70/90	80/102	90/115	90/130	102/150

All measurements in millimetres (mm) unless otherwise quoted.

KS2-DVLP Cylinders

Trunnion mounting - spherical bearing rod end

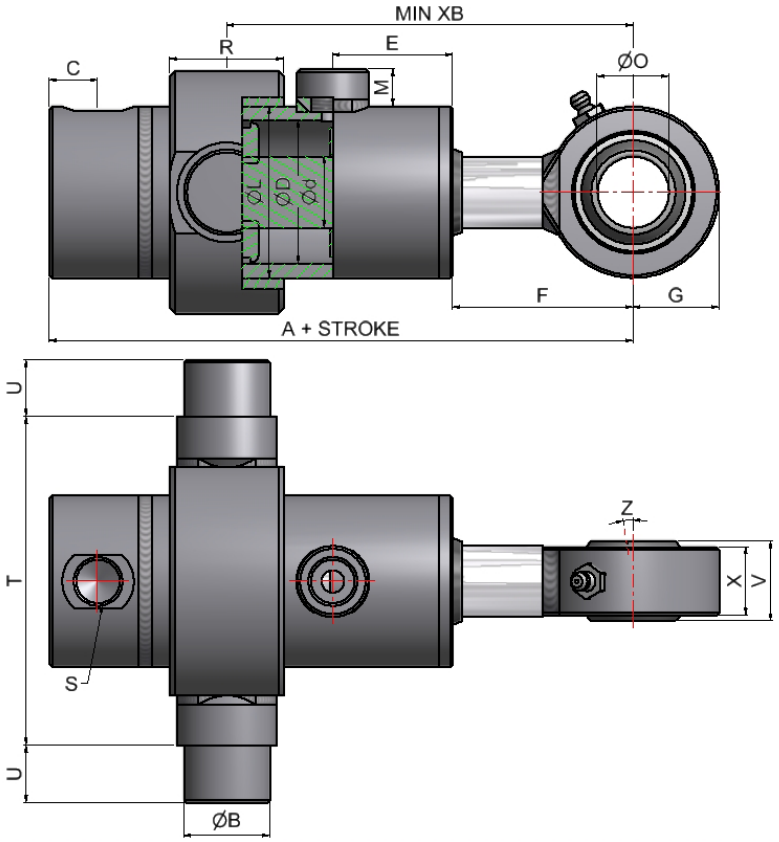

Specifications

ØD	50	63	80	90	100	110	125	140	160	180	200	220	250
Ød	25/32	32/40	40/50	45/56	50/63	56/70	63/80	70/90	80/100	90/110	100/125	100/140	110/160
A	179	195	213	228	263	277	300	311	354	371	388	480	515
ØB	30 f7	35 f7	40 f7	45 f7	50 f7	55 f7	60 f7	70 f7	80 f7	90 f7	90 f7	110 f7	140 f7
C	15	18	18	20	22	23	25	21	28	26	27	40	35
E	42	46	51	56	76	76	90	102	114	122	122	135	158
F	64	74	76	84	93	104	103	102	115	116	129	165	166
G	30	35	40	50	55	55	65	80	85	85	90	120	130
ØL	60	73	95	105	120	130	145	165	185	210	230	254	298.5
M	14	14	18	18	18	18	18	18	22	22	22	22	22
ØO	25 (-0.01)	30 (-0.01)	35 (-0.012)	45 (-0.012)	50 (-0.012)	50 (-0.012)	60 (-0.015)	70 (-0.015)	80 (-0.015)	80 (-0.015)	90 (-0.02)	110 (-0.02)	120 (-0.02)
R	40	50	60	65	70	80	80	100	110	130	150	150	190
S	3/8”	3/8”	1/2”	1/2”	3/4”	3/4”	3/4”	3/4”	1”	1”	1”	1”	1”
T	115	130	145	160	175	190	210	230	275	300	320	355	410
U	20	20	25	27.5	30	35	40	42.5	52.5	55	55	60	100
V	29	30	35	40	43	43	54	65	74	74	60	70	85
X	24	28	32	38	40	40	50	60	70	70	80	80	90
Z	4°	4°	4°	4°	4°	4°	3°	4°	4°	4°	5°	6°	6°
XB	160	175	200	215	243	255	280	293	330	343	365	447	477

All measurements in millimetres (mm) unless otherwise quoted.

KS2-DVGP Cylinders

Trunnion mounting - threaded rod end

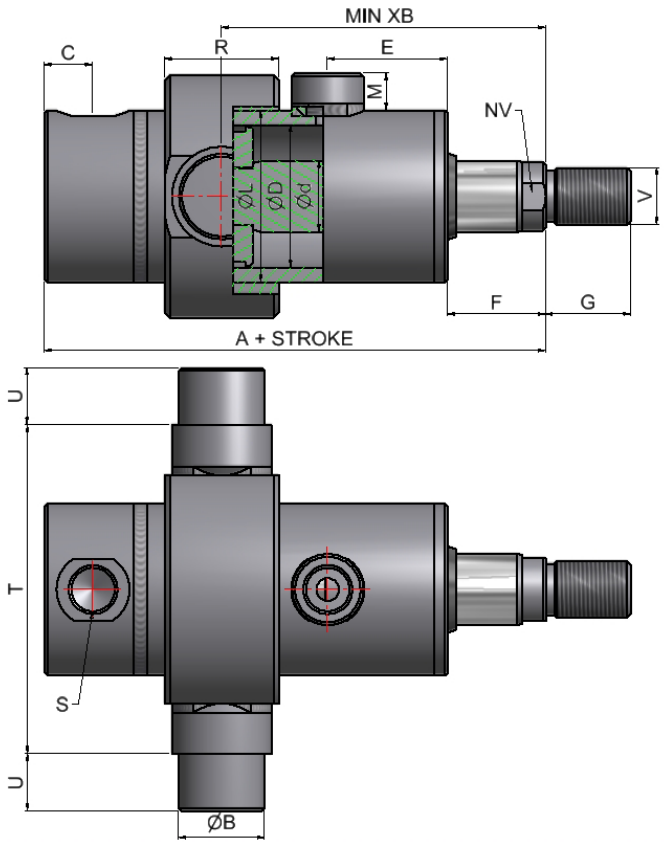

Specifications

ØD	50	63	80	90	100	110	125	140	160	180	200	220	250
Ød	25/32	32/40	40/50	45/56	50/63	56/70	63/80	70/90	80/100	90/110	100/125	100/140	110/160
A	149	160	173	183	207	222	235	238	269	288	298	368	388
ØB	30 f7	35 f7	40 f7	45 f7	50 f7	55 f7	60 f7	70 f7	80 f7	90 f7	90 f7	110 f7	140 f7
C	15	18	18	20	22	23	25	21	28	26	27	40	35
E	42	46	51	56	76	76	90	102	114	122	122	135	158
F	34	39	36	39	37	49	38	29	30	33	39	53	39
G	28	36	45	45	56	56	57	75	85	85	85	106	112
ØL	60	73	95	105	120	130	145	165	185	210	230	254	298.5
M	14	14	19	19	19	19	19	19	22	22	22	22	22
R	40	50	55	65	70	80	80	100	110	130	150	150	190
S	3/8”	3/8”	1/2”	1/2”	3/4”	3/4”	3/4”	3/4”	1”	1”	1”	1”	1”
T	115	130	145	160	175	190	210	230	275	300	320	355	410
U	20	20	25	27.5	30	35	40	42.5	52.5	55	55	60	100
V	M20x1.5	M27x2	M33x2	M33x2	M42x2	M42x2	M48x2	M56x2	M64x3	M64x3	M72x3	M90x3	M100x3
XB	132	140	160	170	187	200	215	220	245	260	275	335	350
NV	22/25	25/35	35/45	38/48	45/55	48/60	55/70	60/80	70/90	80/102	90/115	92/130	102/150

All measurements in millimetres (mm) unless otherwise quoted.

KS2-DVLBF Cylinders

Bottom flange - spherical bearing rod end

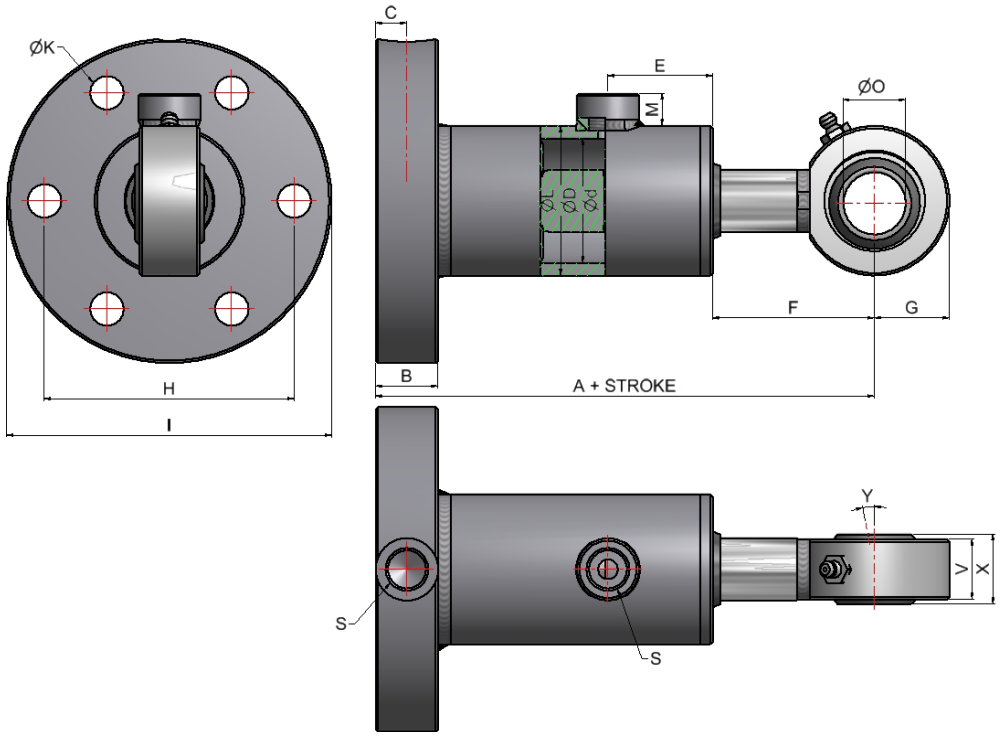

Specifications

ØD	50	63	80	90	100	110	125	140	160	180	200	220	250
Ød	25/32	32/40	40/50	45/56	50/63	56/70	63/80	70/90	80/100	90/110	100/125	100/140	110/160
A	175	190	213	228	258	277	300	311	354	376	398	487	527
B	25	25	30	30	35	35	40	45	50	55	60	65	70
C	12.5	12.5	15	15	17.5	17.5	20	21.5	25	27.5	30	32.5	35
E	42	46	51	56	76	76	90	102	114	122	122	135	158
F	65	79	82	93	93	112	107	97	119	117	130	188	169
G	30	35	40	50	55	55	65	80	85	85	90	120	130
H	100	115	155	165	190	200	215	235	275	300	330	375	420
I	130	145	195	205	230	240	255	275	330	355	390	440	505
ØK	6 x 13.5	6 x 13.5	6 x 17.5	6 x 17.5	6 x 22	6 x 22	8 x 22	8 x 22	8 x 26	8 x 26	8 x 33	8 x 33	8 x 39
ØL	60	73	95	105	120	130	145	165	185	210	230	250	298.5
M	14	14	18	18	18	18	18	18	22	22	22	22	22
ØO	25 (-0.01)	30 (-0.01)	35 (-0.012)	45 (-0.012)	50 (-0.012)	50 (-0.012)	60 (-0.015)	70 (-0.015)	80 (-0.015)	80 (-0.015)	90 (-0.02)	110 (-0.02)	120 (-0.02)
S	3/8”	3/8”	1/2”	1/2”	3/4”	3/4”	3/4”	3/4”	1”	1”	1”	1”	1”
V	24	28	32	38	40	40	50	60	70	70	80	80	90
X	29	30	35	40	43	43	54	65	74	74	60	70	85
Y	4°	4°	4°	4°	4°	4°	3°	4°	4°	4°	6°	8°	6°

All measurements in millimetres (mm) unless otherwise quoted.

KS2-DVGBF Cylinders

Bottom flange - threaded rod end

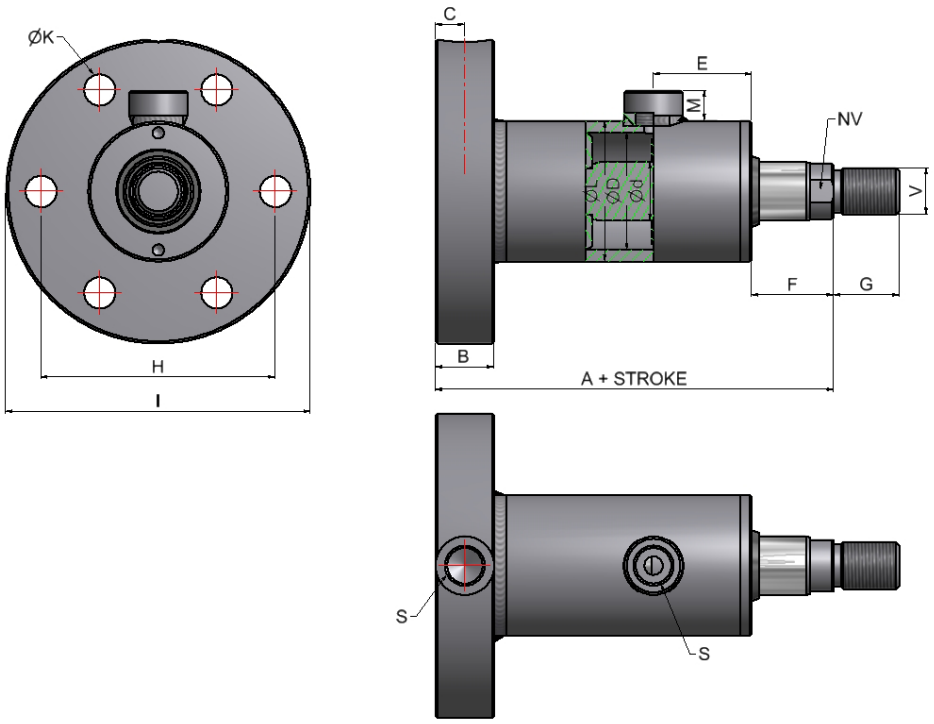

Specifications

ØD	50	63	80	90	100	110	125	140	160	180	200	220	250
Ød	25/32	32/40	40/50	45/56	50/63	56/70	63/80	70/90	80/100	90/110	100/125	100/140	110/160
A	145	155	173	183	205	222	235	237	274	293	308	375	400
B	25	25	30	30	35	35	40	45	50	55	60	65	70
C	12.5	12.5	15	15	17.5	17.5	20	22.5	25	27.5	30	32.5	35
E	42	46	51	56	76	76	90	102	114	122	122	135	158
F	35	44	42	48	40	57	42	23	39	34	40	76	42
G	28	36	45	45	56	56	63	75	85	85	85	106	112
H	100	115	155	165	190	200	215	235	275	300	330	375	420
I	130	145	195	205	230	240	255	275	330	355	390	440	505
ØK	6 x 13.5	6 x 13.5	6 x 17.5	6 x 17.5	6 x 22	6 x 22	8 x 22	8 x 22	8 x 26	8 x 26	8 x 33	8 x 33	8 x 39
ØL	60	73	95	105	120	130	145	165	185	210	230	250	298.5
M	14	14	18	18	18	18	18	18	22	22	22	22	22
S	3/8”	3/8”	1/2”	1/2”	3/4”	3/4”	3/4”	3/4”	1”	1”	1”	1”	1”
V	M20x1.5	M27x2	M33x2	M33x2	M42x2	M42x2	M48x2	M56x2	M64x3	M64x3	M72x3	M90x3	M100x3
NV	22/25	25/35	35/45	38/48	45/55	48/60	55/70	60/80	70/90	80/102	90/115	90/130	102/150

All measurements in millimetres (mm) unless otherwise quoted.

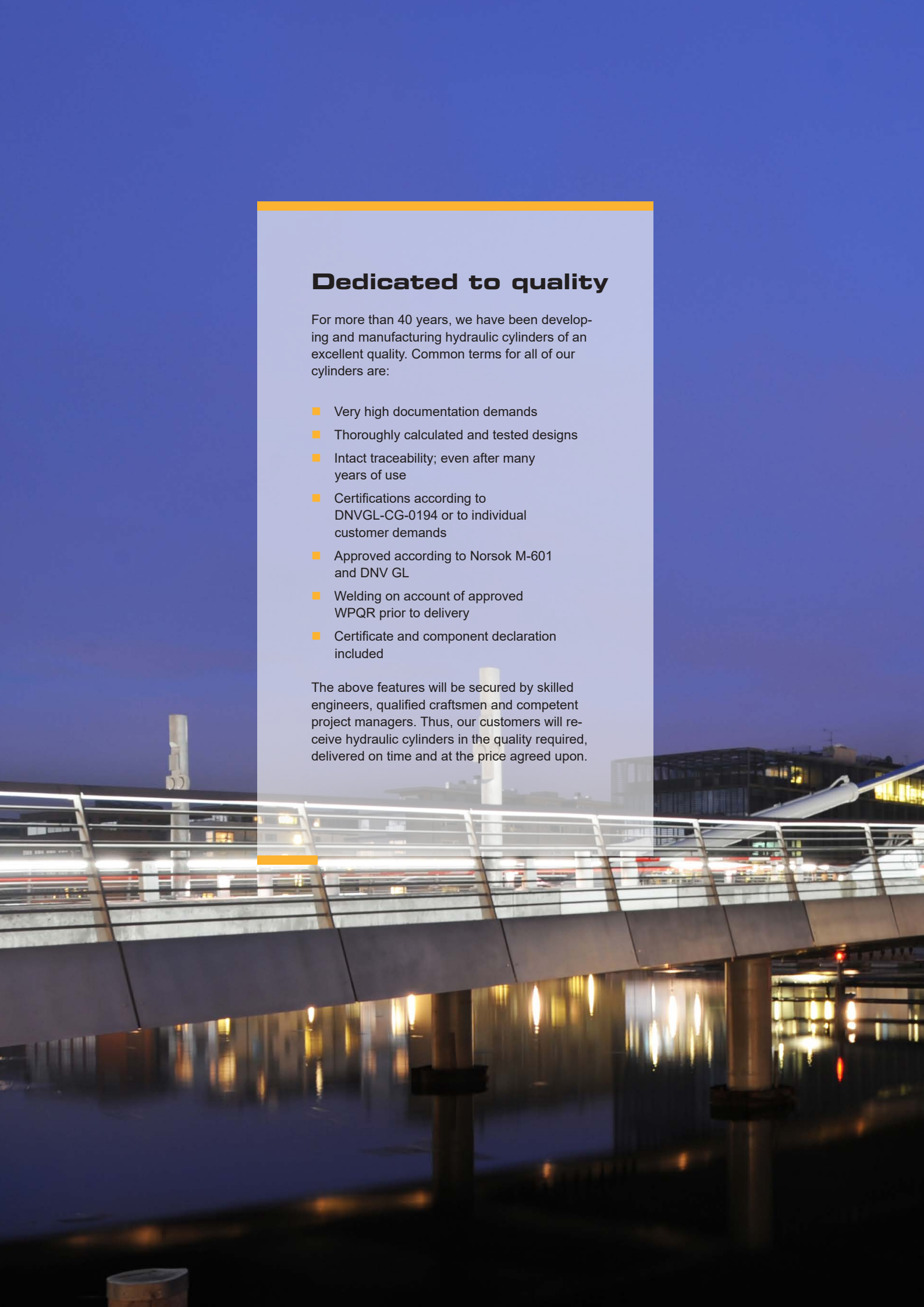

Dedicated to quality

For more than 40 years, we have been developing and manufacturing hydraulic cylinders of an excellent quality. Common terms for all of our cylinders are:

- Very high documentation demands
- Thoroughly calculated and tested designs
- Intact traceability; even after many years of use
- Certifications according to DNVGL-CG-0194 or to individual customer demands
- Approved according to Norsok M-601 and DNV GL
- Welding on account of approved WPQR prior to delivery
- Certificate and component declaration included

The above features will be secured by skilled engineers, qualified craftsmen and competent project managers. Thus, our customers will receive hydraulic cylinders in the quality required, delivered on time and at the price agreed upon.

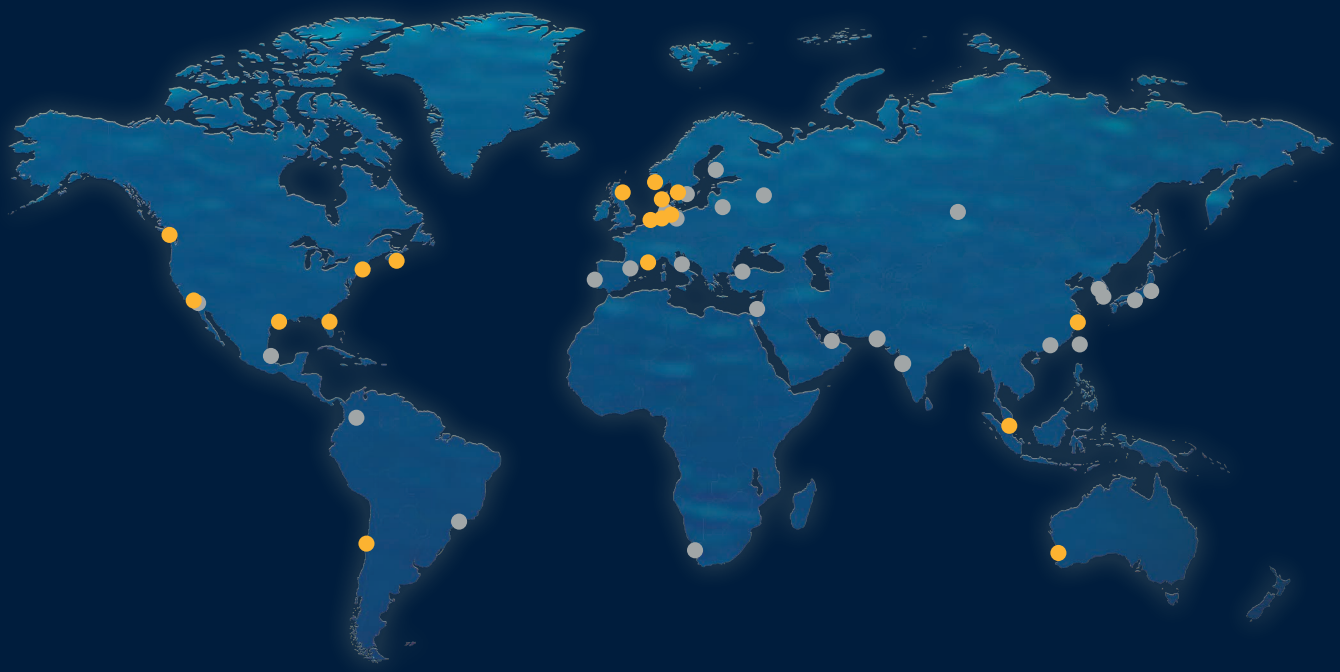

MacArtney
UNDERWATER TECHNOLOGY

MacArtney A/S · Group Headquarters: Gl. Guldagervej 48 · DK-6710 Esbjerg V · Denmark · Tel. +45 7613 2000 · info@macartney.com

www.macartney.com